The Human Head as an Egg Shaped Oval

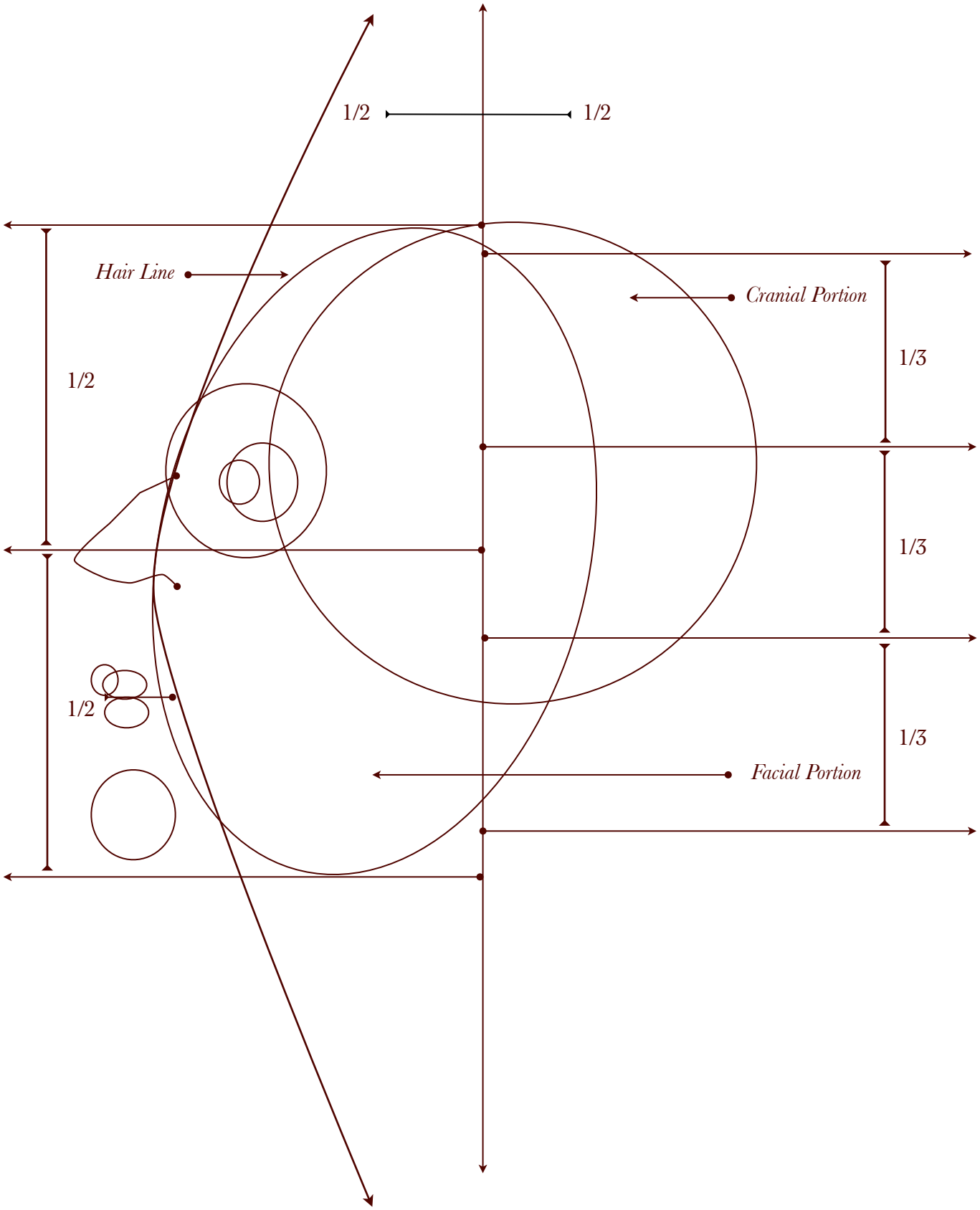

Idealized Proportion of the Human Head

Humanis Anatomicae

© Copyright 2008 by Michael M. Hensley